Rec 1/12/65 U-3

ALLIS-CHALMERS

MODEL B-10 LAWN AND GARDEN TRACTOR

from the folks who make the big tractors

get into the swing of easy living yard care with Allis-Chalmers new lawn and garden tractor

ALLIS-CHALMERS

9 HP

MODEL

B-10

POWER

Rugged, new "total power" does the bigger jobs better and more easily . . . and keeps on doing 'em. Husky, 9 horsepower engine supplies power with top efficiency to all three power take-off points (front, center, rear) and to the rear wheels. "Easy-Spin" starting and a heavy-duty, 12-volt electrical system assure instant, positive starts. The B-10 has a rigid, heavy-gauge steel plate frame that's rattle-free and twist-free.

COMFORT

Here's a tractor that's easy to get onto. Once on, you relax in a wide, thick, foam rubber seat with comfortable back and arm rests. High, crescent-shaped steering wheel gives you plenty of knee clearance. You see your attachments easily, too. "Easy-lift" implement control is standard equipment—lets anyone in the family handle the implements with ease . . . from the tractor seat. Implements are easily attached and adjusted to the desired working height.

VERSATILITY

. . . ideal for gardening, mowing, clearing and maintaining streets and walks. The B-10 has a complete line of versatile, power-matched implements . . . makes lawn and garden tasks more fun. Easier and faster too. A mobile alternator generator provides electric power for operating electric grass mowers, hedge trimmers, pruning equipment and power saws away from electrical outlets.

WHATEVER YOUR SEASONAL NEEDS THE B-10 WILL HANDLE THE JOB

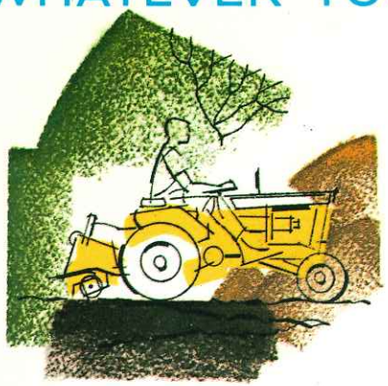

GARDENING

For a better garden and more gardening fun, it's important to get off to a good start. A rotary tiller helps prepare an ideal seed-bed quickly and easily. A cultivator eliminates the callouses and aches that go with a well-tended garden . . . and it's far speedier and more efficient than hand hoeing.

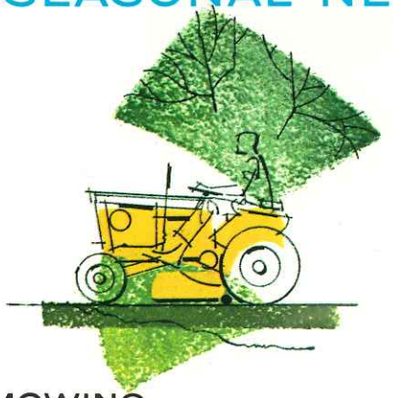

MOWING

The B-10 has power to tackle tall, tough grass and lots of it. With the big 42″ rotary mower you cover large ground areas fast. A wide-cutting, five-gang mower is also available to give you a professional mowing job in parks, golf courses and large estates.

MATERIAL HANDLING

Farm and commercial users find the B-10 hydraulic loader and hydraulic fork lift of special interest. The hydraulic loader has a lifting capacity at full height of 300 pounds. The fork lift has a 500-pound capacity at 15″ load center.

SNOW REMOVAL

Fast, snow removal is a cinch with the powerful 36″ snow thrower that deposits snow on the far side of your drive. A big, 42″ snow and dozer blade is also available and does an excellent job of snow removal, as well as other grading and cleaning tasks.

You'll find pride aplenty when you put your B-10 to its first test. Its attractive, streamlined design and rugged, nine-horsepower engine mean TOTAL POWER to do the tougher jobs better and more easily.

POWER WITH A PURPOSE

1. BELT CLUTCH
2. REAR PTO
3. GEAR SHIFT LEVER
4. IGNITION KEY
5. FUEL TANK
6. FUEL GAUGE
7. 12 VOLT BATTERY
8. IMPLEMENT LIFT LEVER
9. 9 HP ENGINE
10. FRONT PTO
11. FOOT REST
12. CENTER PTO
13. DIRECT DRIVE
14. BRAKE LOCK
15. CHOKE
15. THROTTLE
16. STARTER
17. SPUR GEAR DIFFERENTIAL
18. STARTER & GENERATOR
19. GEAR TRANSMISSION
20. COMBINATION CLUTCH & BRAKE

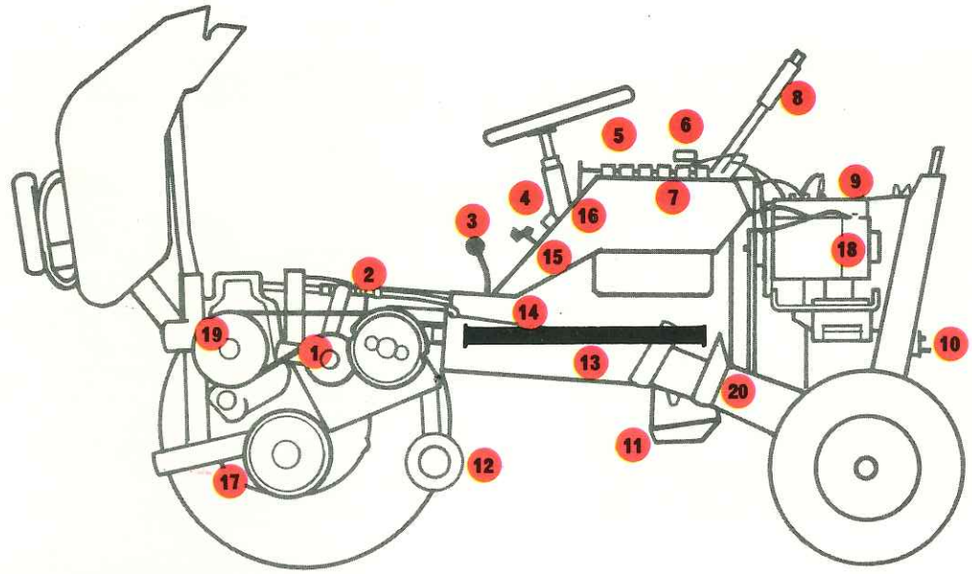

EXTRA-WIDE REAR TIRES . . . give you the traction and flotation to keep moving regardless of ground conditions. Big, 8.00 x 12 tires with ground-gripping tread design are standard equipment.

INSTRUMENT PANEL . . . Controls conveniently grouped within easy reach. Simple, attractive instrument panel includes push button starter, ignition key switch, throttle, choke and ammeter.

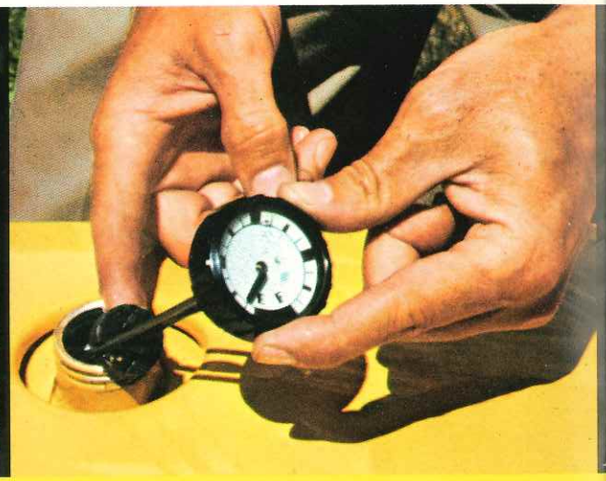

FUEL GAUGE . . . It's built into the gasoline tank cap and located on top of the hood. You check your fuel supply at a glance. Exterior gasoline cap lets you fill tank without opening hood.

POWER FOR ALL YOUR JOBS

SPRING

Nothing compares to a 32" rotary tiller teamed with the B-10 tractor for preparing your seedbed for best planting results. Husky, non-clogging tines are guaranteed against breaking.

Big, rugged, 46" sickle bar mower cuts up to two acres per hour, requires little maintenance. Handles heavy growth with ease, even over rough terrain and steep slopes.

SUMMER

Five-gang trailer mower makes an eight-foot cut and is ideal for estates, parks and golf courses . . . wherever a really big mowing job is required. It cuts up to 5.8 acres per hour.

The big, 42" rotary mower cuts deep grass up to two acres per hour. The B-10's special front axle suspension always keeps mower parallel to ground for clean, uniform cutting, without scalping. Cuts to within ⅝" on either side. Cutting height is easily adjusted.

POWER FOR ALL YOUR JOBS

FALL

Fall cleanup is especially fast and easy with the heavy-gauge, reinforced steel, half-ton dump cart. Dump body dumps completely without disconnecting trailer hitch or lifting trailer wheels from ground.

Steel, center-mounted, 42" grader blade angles right, left or straight ahead and floats with contour of ground. Blade is reversible and attaches easily. Ideal for maintaining gravel driveways and leveling dirt.

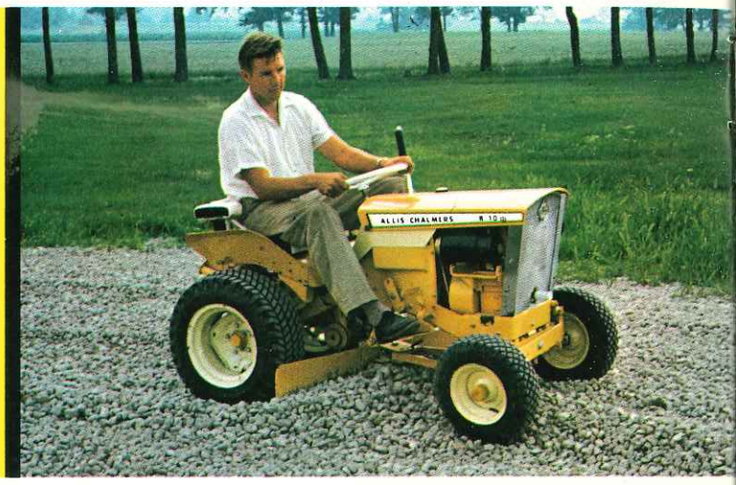

WINTER

Angle-type snowplow and dozer blade mounts up front . . . cleans drives fast. Big, 42" width makes it excellent for grading and cleaning work, too, especially farm buildings and poultry runs.

Powerful, 36" rotary snow thrower penetrates the deepest snowbanks, keeps going on uneven ground . . . And B-10 power sees that you don't have to move the snow twice to clean a wide drive. Powerful throwing action piles your snow on the far side of the drive, or just where you want it. Revolving outlet duct adjusts to throw snow in any direction.

You'll like the extra leisure the B-10 gives you for really enjoying your lawn and garden. The complete set of attachments, easy fingertip controls and fast hookup make B-10 gardening fun. The B-10 is a quality-built tractor from the folks who make the big ones.

B-10 SPECIFICATIONS AND FEATURES

STANDARD EQUIPMENT—Four-cycle (Briggs & Stratton) air-cooled gasoline engine with "oil foam"* air cleaner; 12-volt electric system; electric starter-generator; magneto ignition; key ignition switch; push-button starting; controlled traction differential; three forward and one reverse speeds; drawbar; foot-operated clutch and brake; foam-rubber seat, arms and back rest; footrest; fenders; implement lift system; 3 PTO centers; 4.80 x 8 (2-ply) front tires, 8.00 x 12 (2-ply) rear tires; hinged seat and hood; painted yellow.

OPTIONAL EQUIPMENT—Dual rear wheels; speed reduction drive; hitch adapter; PTO Center Mount; front counterweight; rear counterweight; Auxiliary weight; rear wheel weights; tire chains (8.00 x 12); electric lights. Dual lift control lever; chrome hub caps.

MODEL B-10 ENGINE:

Make	Briggs & Stratton
Type	4 cycle—air-cooled
Horsepower	9
Torque	15.75 ft. lbs. @ 2400 RPM
Bore and Stroke	3" x 3¼"
Displacement	22.97 cu. in.
RPM	3600 max. full load
Air Cleaner	"Oil Foam"*
Starter	Electric and manual
Governor	Mechanical (flyweight)
Ignition System	12-Volt (Starter, generator and magneto)
Transmission	Sliding spur gear and spiral bevel gear; three speeds forward and one reverse
Differential	Spur gear with controlled traction
Engine/Trans. Drive	Direct shaft with flexible couplings

CAPACITY:

Engine case	2 qts.
Fuel tank	6 qts.

SPEEDS:

First	2 mph
Second	3¾ mph
Third	6 mph

DIMENSIONS:

Height (at steering wheel)	37¼"
Height (at hood line)	33⅜"
Width	34¼"
Length	68"
Wheel tread	26"
Wheel base	44"
Clearance (front axle)	9"
Clearance (diff.)	6"
Clearance (drawbar)	7"
Clearance (center housing)	15¼"

SHIPPING WEIGHT—(Approx.) 685 lbs.

*Trademark of Briggs and Stratton

ALLIS-CHALMERS

MODEL B-10

LAWN AND GARDEN TRACTOR

ALLIS-CHALMERS, MILWAUKEE 1, WISCONSIN

LG-112 / 639

Printed in U.S.A.